REV	DESCRIPTION	DATE	APPROVED
R2A	DRILL Φ13/64 WAS 3/16	230603	NO

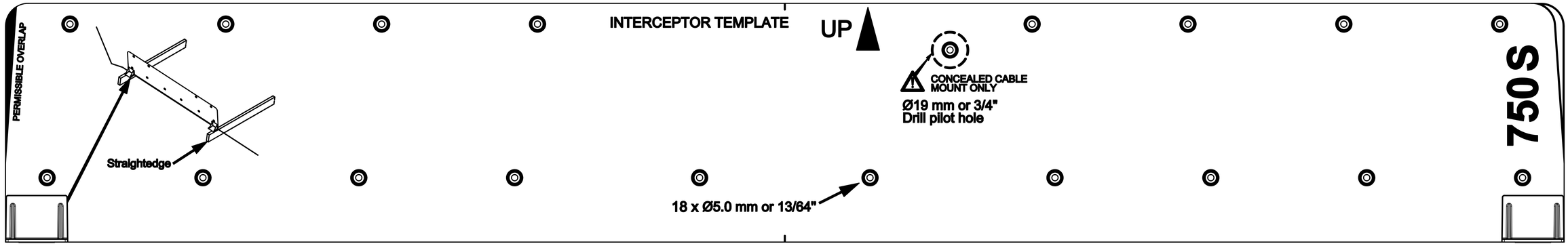

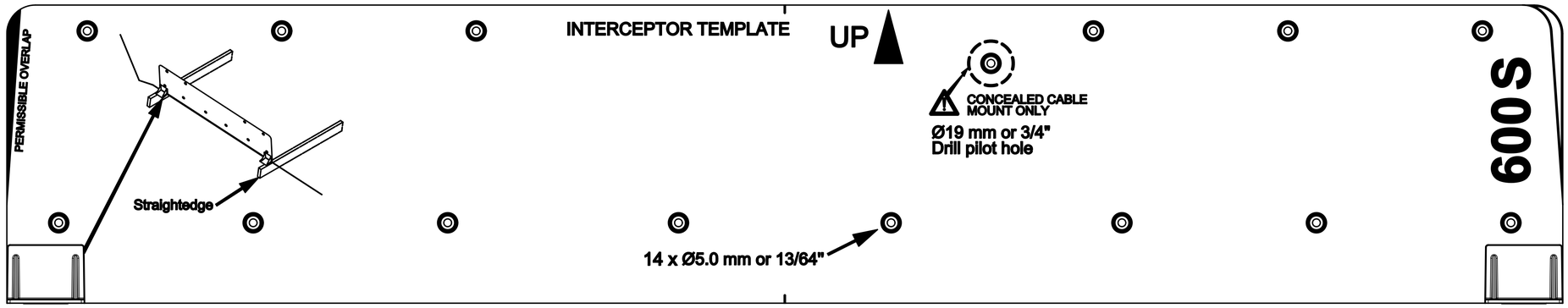

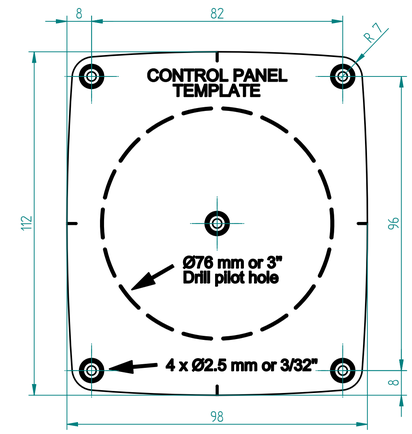

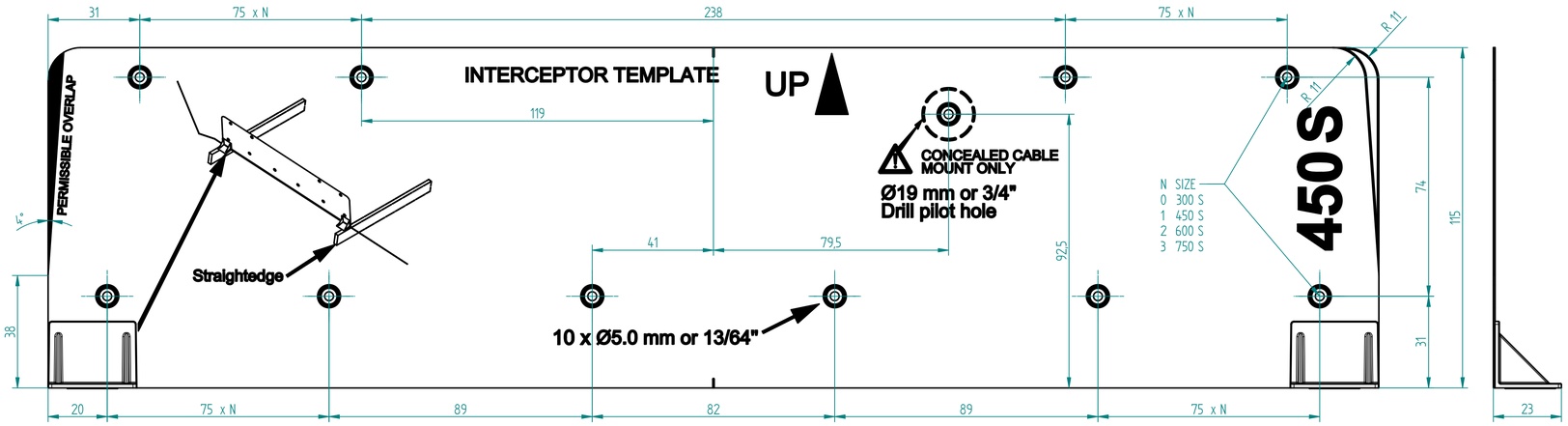

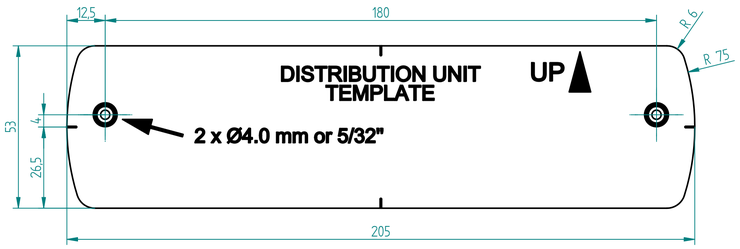

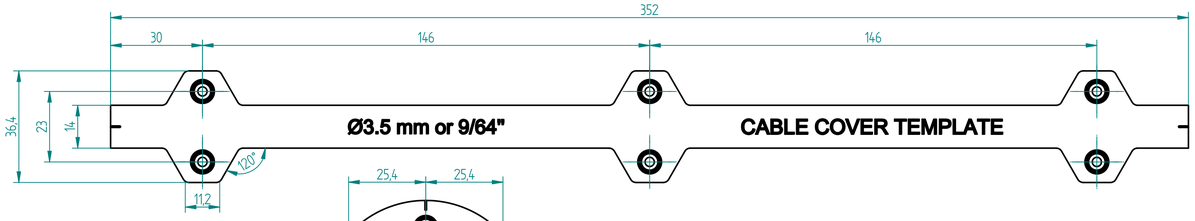

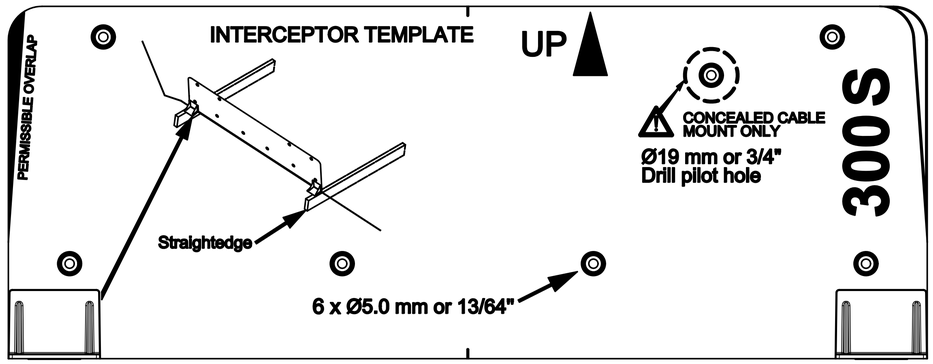

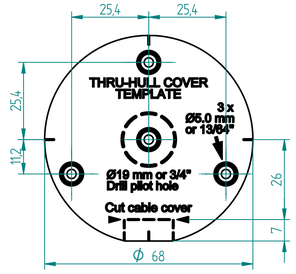

ALL DIMENSIONS IN mm
DIMENSIONS WITHIN BRACKETS (inches)

DO NOT SCALE DRAWING

COPYRIGHT 2015. ALL RIGHTS RESERVED BY ZIPWAKE AB.
THE INFORMATION CONTAINED IN THIS DRAWING SHALL NOT BE REPRODUCED IN PART OR AS A WHOLE WITHOUT THE PRIOR WRITTEN PERMISSION OF ZIPWAKE AB.

	NAME	DATE
DRAWN	JD	150123
CHECKED		
APPROVED		

UNLESS OTHERWISE SPECIFIED GENERAL TOLERANCES ACCORDING TO ISO 2768-1-m

www.zipwake.com

ZIPWAKE

TITLE: SERIES S DRILL TEMPLATES

SIZE A1 | DWG. NO. 3015011 | REV R2A

FILE NAME: 3015011_Zipwake_Series_S_Drill_Templates_R2A.dft

SCALE: 1:1 | WEIGHT: | SHEET 1 OF 1