REV	DESCRIPTION	DATE	APPROVED
R2A	DRILL Φ13/64 WAS 3/16	230603	NO

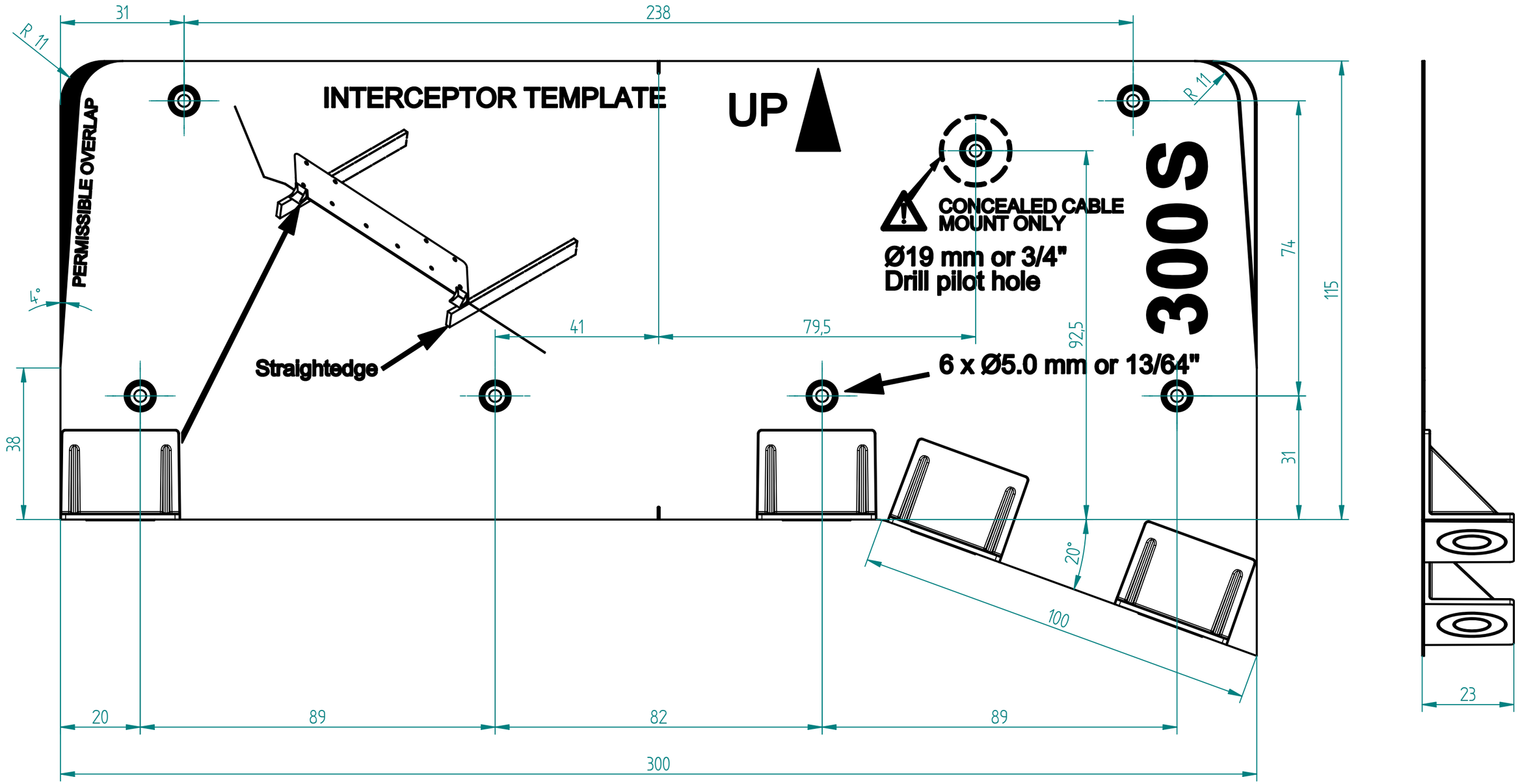

ALL DIMENSIONS IN: mm
DIMENSIONS WITHIN BRACKETS: [Inches]

DO NOT SCALE DRAWING

COPYRIGHT 2015. ALL RIGHTS RESERVED BY ZIPWAKE AB.
THE INFORMATON CONTAINED IN THIS DRAWING SHALL NOT BE REPRODUCED IN PART OR AS A WHOLE WITHOUT THE PRIOR WRITTEN PERMISSION OF ZIPWAKE AB.

	NAME	DATE
DRAWN	JD	171028
CHECKED		
APPROVED		

UNLESS OTHERWISE SPECIFIED GENERAL TOLERANCES ACCORDING TO ISO 2768-1-m

www.zipwake.com

ZIPWAKE

TITLE: IT300-S CHINE STBD DRILL TEMPLATE

SIZE A3 | DWG. NO. 3015073 | REV R2A

FILE NAME: 3015073_Zipwake_Interceptor_300S_Chine_Stbd_Drill_Template_R2A.dft

SCALE: 1:1 | WEIGHT: | SHEET 1 OF 1