RAILBLAZA®
HOLD EVERYTHING...

RAILBLAZA HEXX™ ROTATING PLATFORM INSTRUCTION SHEET.

Online instruction sheet.

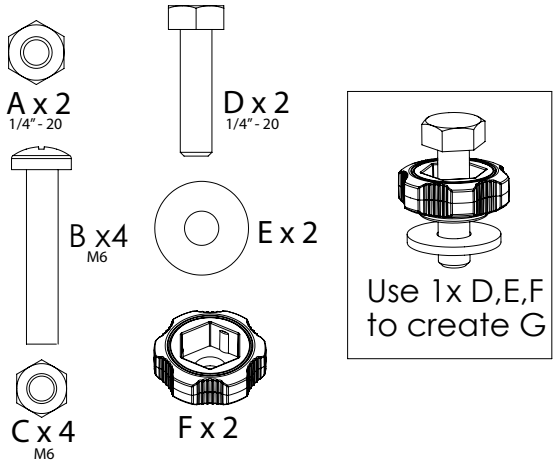

1

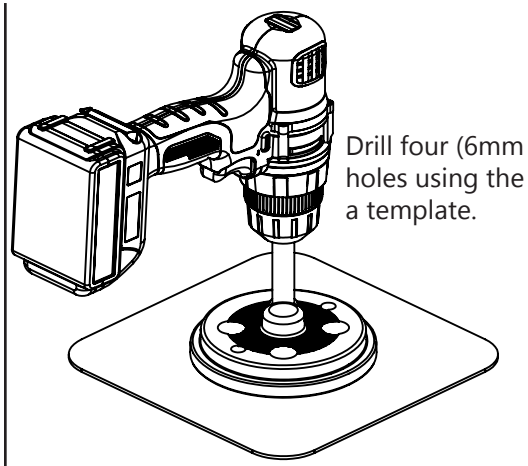

Drill four (6mm - 1/4") pilot holes using the base plate as a template.

2

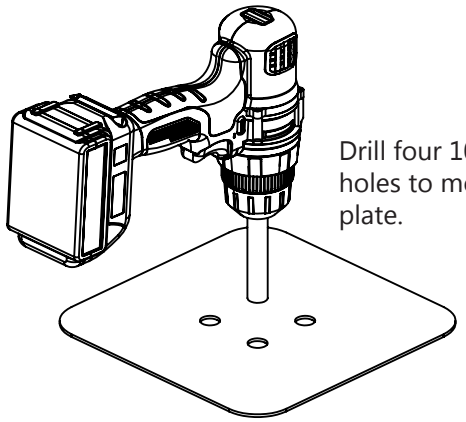

Drill four 10mm (25/64") holes to mount the base plate.

3

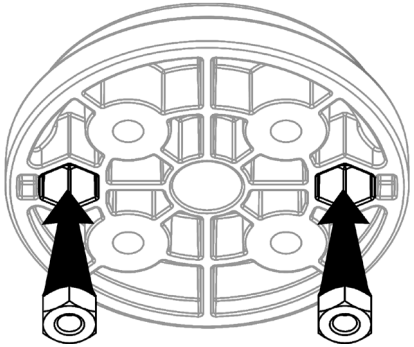

Push two A nuts into the hex recess in the base plate.

4

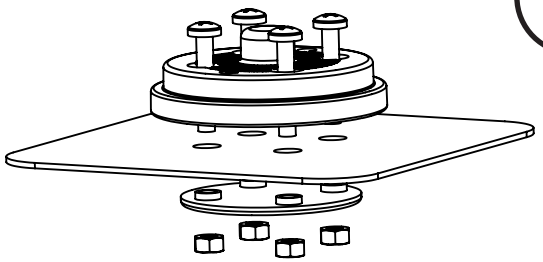

Push the backer plate into the four holes with the R facing down and bolt the base plate using the B Philips screws and C nuts.

5

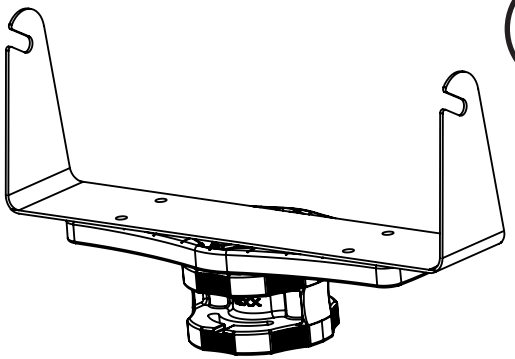

Attach your fish finder bracket to the platform.

6

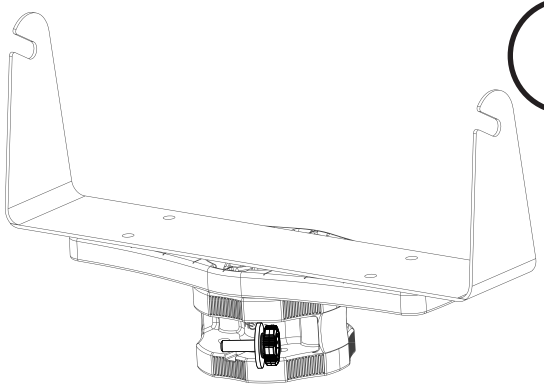

Step 6. Install the two thumb bolts G.
Note: Guide them into the slot from the side.

7

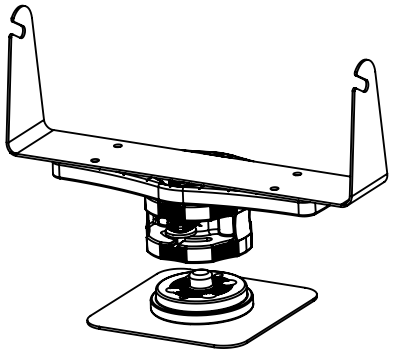

Attach to base plate using thumb screws.
Now the install is complete!